Ultra High Purity Transducer, Nonincendive Models NWU-10, NWU-15 and NWU-16 with and without side access

Applications

- Semiconductor and flat panel display industry
- Microelectronics engineering
- Gas distribution systems
  (Gas sticks, gas panels, bulk-gas supply)
- Ultra high purity water supply

Special Features

- No span adjustment required
- Excellent long-term stability
- Exchangeable electronics
- Ingress protection IP 65 / IP 54 with side access

Fig. left Transducer NWU-10, Single End
Fig. center Transducer NWU-15, Flow Through
Fig. right Transducer NWU-16, Modular Surface Mount

Description

Universal
As a result of its broad pressure range spectrum from vacuum up to 400 bar (5000 psi), its compact design and its excellent performance, model NWU-10 offers a perfect combination of an appealing design and proven measuring technology.

Flow through transducers of the NWU-15 series have been developed for ultra pure media applications where, apart from the requirement for easy cleaning of the transducer, the application also demands a proven, stable sensor technology. Through the optimised design of the sensor connection, external influences on the sensor signal have been eliminated, even in the case of varying fastening torques of the process connections.

Reliable
Thin-film sensors produced by WIKA have ensured high accuracy, long-term stability and repeatabillity in industrial pressure measurement instrumentation for decades.
We use special thin-film sensors made of 2.4711 (Elgiloy®) in order to meet the particular requirements of the ultra pure media industry.

Hermetically welding of the thin-film sensor guarantees a total seperation of medium, as well as a long-term high impermeability which is required by the user.

Versatile
The modular design makes it possible to configure a high number of variants in order to comply with the manifold requirements of UHP applications. All wetted parts are electropolished using state-of-the art equipment prior to the final assembly.

The integrated potentiometer enables adjustment of the zero point up to 5% of the full scale value. An adjustment of span is not required.

Exchangeable electronics enable replacement of the amplifier without disconnecting the sensors from the process. The high ingress protection (NEMA-4) allows operation even under the most difficult conditions.

UHP Attachable indicator with LED „Non-incendive“; Model NWUR-1; see Data Sheet PE 87.21

Specifications — Models NWU-10, NWU-15, NWU-16

		NWU-10 / NWU-15										
		NWU-16										
Pressure ranges	bar	4	7	10	16	25	40	60	100	160	250	400
	psi	60	100	160	250	300	500	1000	1500	2000	3000	5000
Over pressure safety [1]	bar	8	14	20	32	50	80	120	200	320	500	500
Burst pressure [1]	bar	40	70	100	160	250	400	550	720	720	720	720
	Other pressure ranges and pressure units (e.g. MPa, kg/cm²) on request											
	[1] 1 bar = 14.50 psi											
Measuring principle		Metal thin film sensor										
Materials												
■ Wetted parts		2,4711 Elgiloy® (Sensor); 316L VIM/VAR (Process connection)										
■ Case		Stainless steel										
Surface finish		Electropolished, typical Ra ≤ 0.18 µm (RA 7); max. Ra ≤ 0.25 µm (RA 10)										
Dead volume	mm³	NWU-10 < 1500, NWU-15 < 1000, NWU-16 < 1000										
Permissible Medium		Liquid / Gas / Vapour										
Power supply U_B	U_B in VDC	$10 < U_B \leq 24$										
Signal output and		4 ... 20 mA, 2-wire										
maximum ohmic load R_A		$R_A \leq (U_B - 10\ V) / 0.02\ A$										
Max. current consumption Ii	mA	30										
Max. permitted input power Pi	W	Ignition protection type nL: 1					Ignition protection type nA: 0.5					
Internal capacity Ci	nF	11 (+0,3 nF/m with version flying leads - order code: DI)										
Internal inductivity Li	µH	10 (+2 µH/m with version flying leads - order code: DI)										
Adjustability zero		± 5 via potentiometer										
Response time (10 ... 90 %)		≤ 2 {≤ 100}										
Dielectric strength	VDC	500										
Accuracy	% of span	≤ 0.25 for pressure ranges > 4 bar (BFSL)										
	% of span	≤ 0.5 for pressure ranges ≤ 4 bar (BFSL)										
	% of span	≤ 0.5 [2] for pressure ranges > 4 bar										
	% of span	≤ 1.0 [2] for pressure ranges ≤ 4 bar										
	[2] Including non-linearity, hysteresis, zero point and full scale error											
	(corresponds to error of measurement per IEC 61298-2).											
	Adjusted in vertical mounting position with lower pressure connection.											
Non-linearity	% of span	≤ 0.15 for pressure ranges > 4 bar (BFSL) nach IEC 61298-2										
	% of span	≤ 0.3 for pressure ranges ≤ 4 bar (BFSL) nach IEC 61298-2										
1-year stability	% of span	≤ 0.2 (at reference conditions)										
Permissible temperature of		T4				T5			T6			
■ Medium		-20...+85 °C / -4...+185 °F				-20...+60 °C/-4...+140 °F			-20...+40 °C / -4...+104 °F			
■ Ambience		-20...+85 °C / -4...+185 °F				-20...+60 °C/-4...+140 °F			-20...+40 °C / -4...+104 °F			
■ Storage		-40...+100 °C / -40...+212 °F				-40...+100°C/-40...+212°F			-40...+100 °C / -40...+212 °F			
Compensated temp. range		-20 ... 80 °C / -4 ... +176 °F										
Temperature coefficients within												
compensated temperature range:												
■ mean TC of zero	% of span	≤ 0.1 / 10 K										
■ mean TC of range	% of span	≤ 0.15 / 10 K										
CE-conformity												
■ Pressure equipment directive		97/23/EG										
■ EMC directive		89/336/EEC emission (class B) and immunity according to EN 61 326										
■ Directive ATEX of equipment												
intended for use in potentially												
explosive atmospheres		94/9/EG										
Ex-protection	ATEX	Category [3] 3G										
Ignition protection type		II 3G Ex nL IIC T4 oder II 3G Ex nA II T4										
	[3] **Read** the operating conditions and safety-relevant data in the **type examination**											
	certificate in any case (BVS 06 ATEX E 116 X)											
Ex-protection	FM	Class I										
Ignition protection type		Non incendive Class I Division 2 Group A, B, C and D										
Shock resistance	g	500 according to IEC 60068-2-27 (mechanical shock)										
Vibration resistance	g	10 according to IEC 60068-2-6 (vibration under resonance)										

Specifications		Models NWU-10, NWU-15, NWU-16
Wiring protection		
■ Short-circuit proofness		Sig+ towards UB-
■ Reverse polarity protection		UB+ towards UB-
Mass	kg	Approx. 0.1

Output signal and allowed load

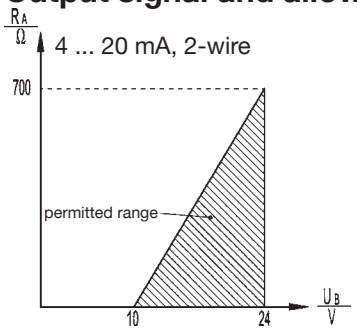

Output current (2-wire)
4 ... 20 mA:
RA ≤ (UB – 10 V) / 0.02 A
with RA in Ohm and UB in VDC

Dimensions in inch [mm] NWU-10

Circular connector
Order code: M4

1/4“ Swivel Female
Face Seal,
Order code: 72

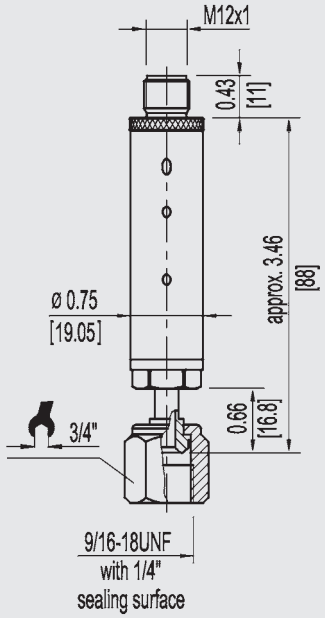

with side access (IP 54 / Nema 3S)

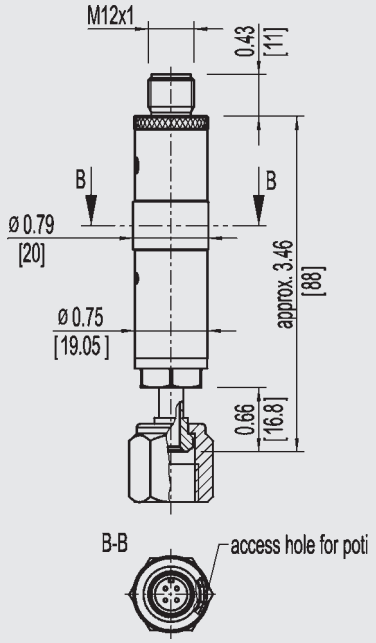

Process connection variants

1/4“ Weld Stub
Order code: VN

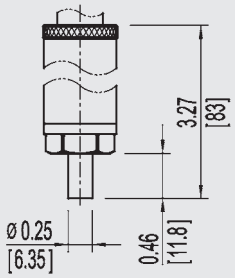

1/4“ Swivel Male Face Seal,
Order code: 71

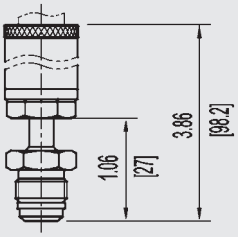

1/4“ T-Connector, Weld Stub
Order code: WT

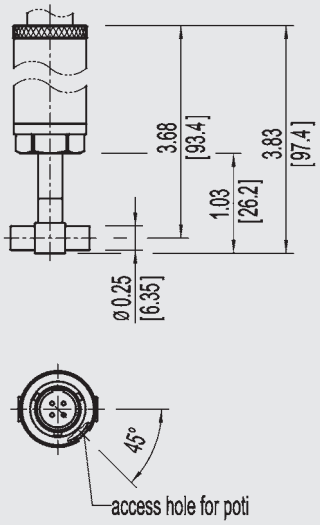

1/4“ T-Connector, Weld Stub (1“)
Order code: WR

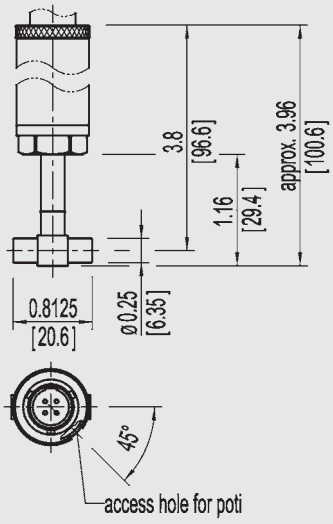

Dimensions in inch [mm] NWU-15

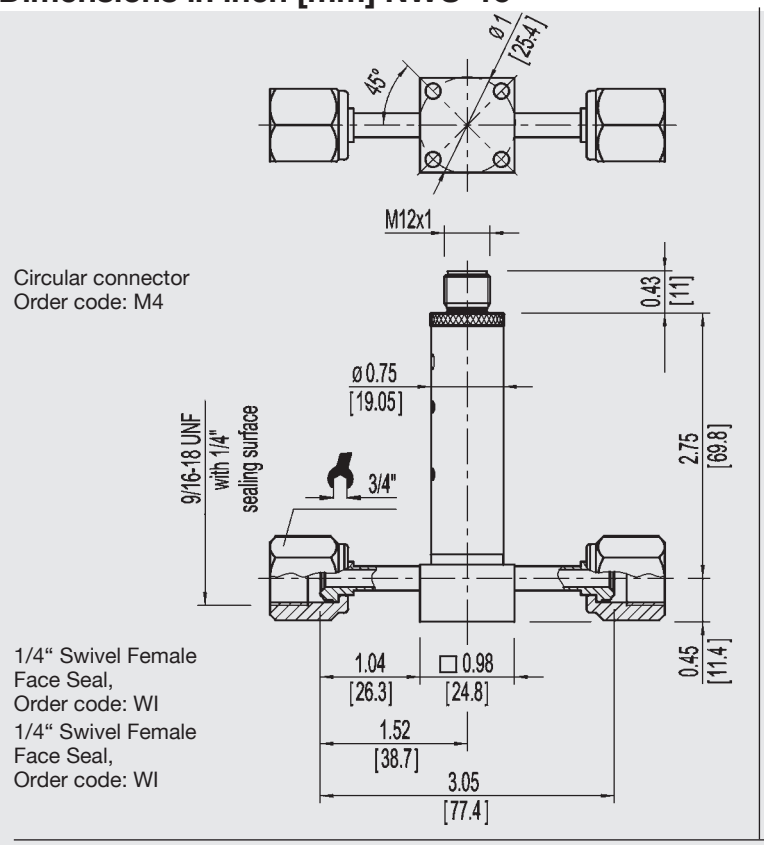

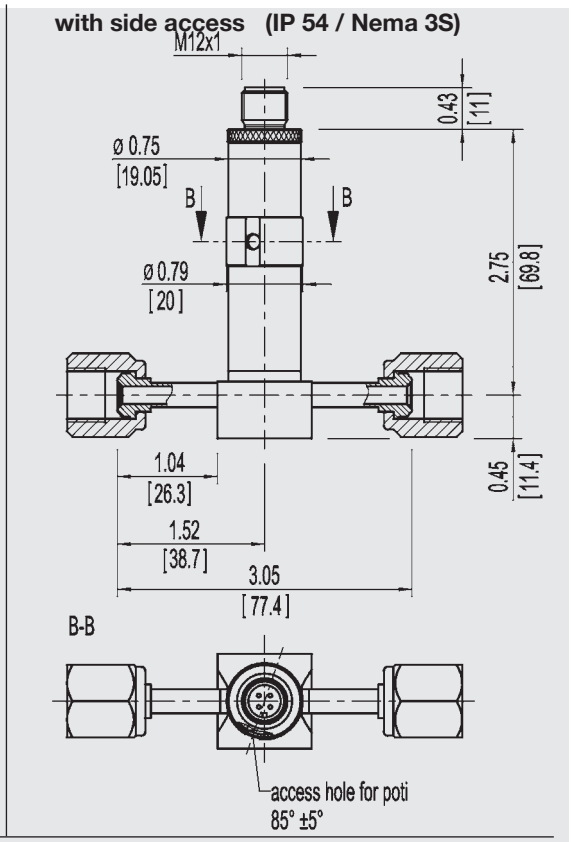

Process connection variants

1/4“ Swivel Female Face Seal
Order code: 72,
1/4“ Swivel Male Face Seal
Order code: 71

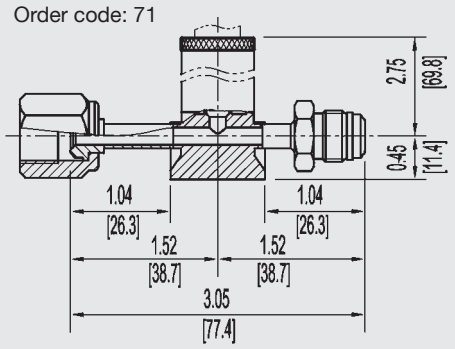

1/4“ Fixed Male Face Seal
Order code: WG
1/4“ Swivel Female Face Seal
Order code: 72

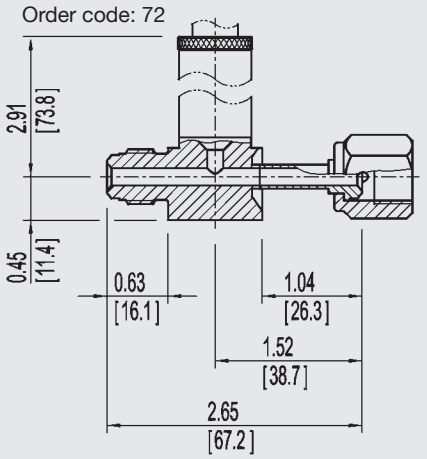

1/4“ Fixed Male Face Seal, Order code: WG
1/4“ Swivel Male Face Seal, Order code: 71

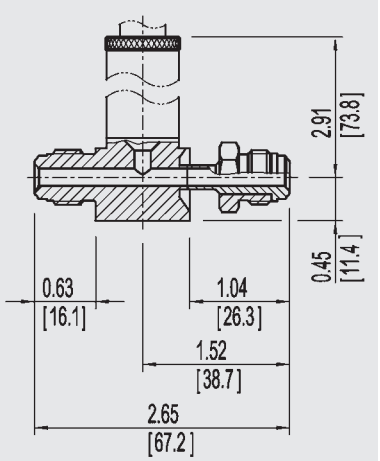

1/4“ Swivel Male Face Seal, Order code: 71
1/4“ Swivel Male Face Seal, Order code: 71

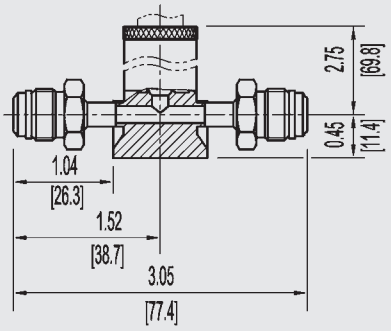

1/4“ Weld Stub, Order code: VN
1/4“ Weld Stub, Order code: VN

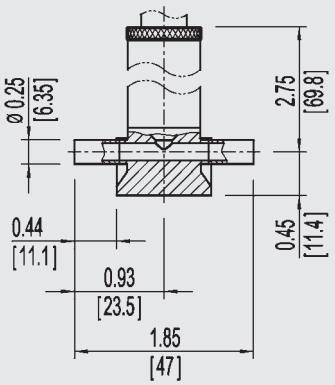

1/4“ Fixed Male Face Seal, Order code: WG
1/4“ Weld Stub, Order code: VN

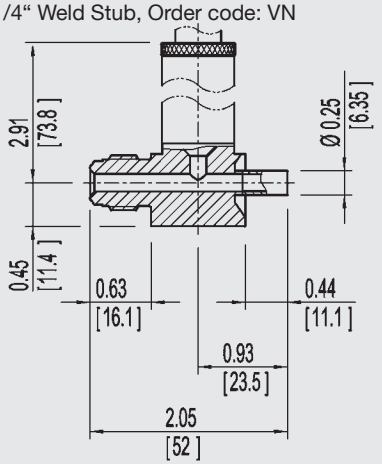

Process connection variants NWU-15

1/4“ Fixed Male Face Seal, Order code: WG
1/4“ Fixed Male Face Seal, Order code: WG

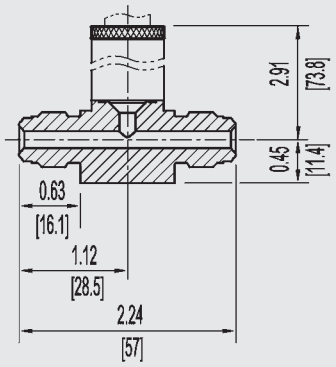

1/4“ Fixed Male Face Seal High Flow Through, Order Code: WM
1/4“ Fixed Male Face Seal High Flow Through, Order Code: WM
only available with pressure ranges up to 25 bar / 300 psi

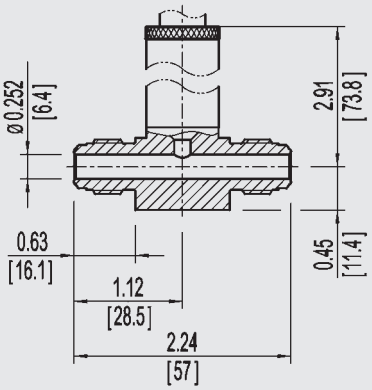

Dimensions in inch [mm] NWU-16

Bayonet connector
Order code: O4

MSM C
1 1/2“ SQ,
Order code:
WC

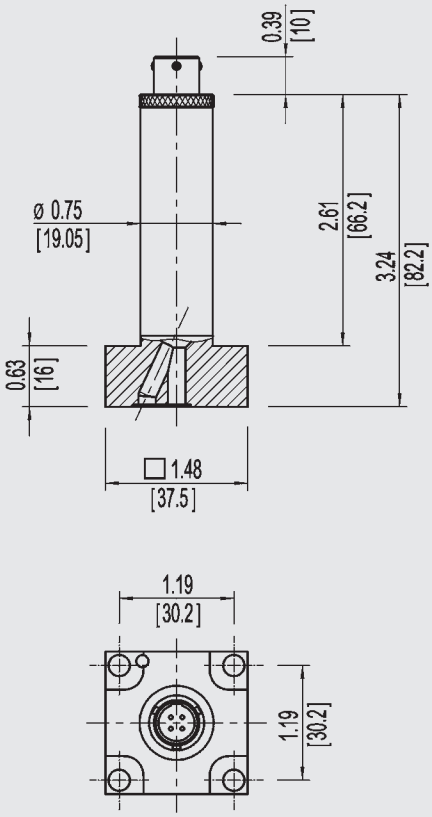

with side access (IP 54 / Nema 3S)

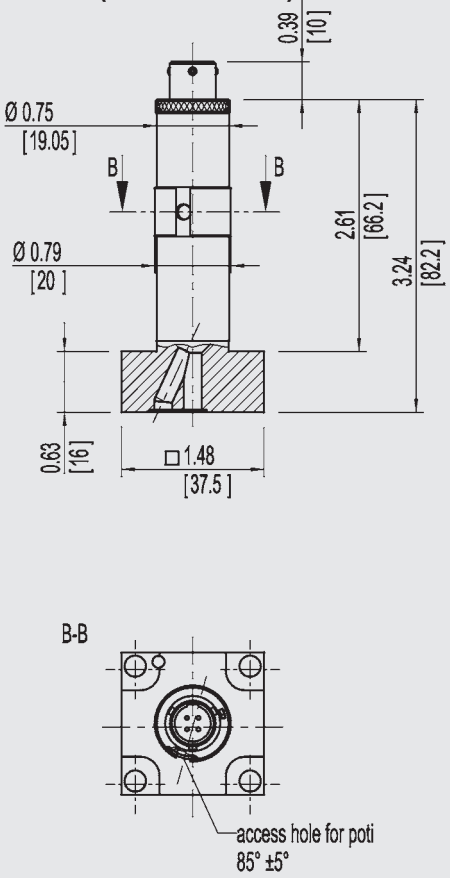

Process connection variants

MSM W 1 1/2“
Order code: WD

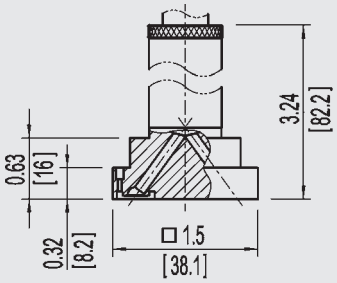

MSM C 1 1/8“ SQ
Order code: WE

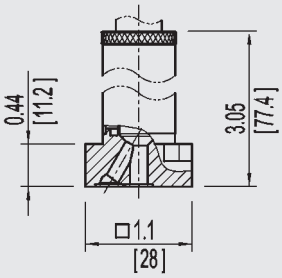

MSM W 1 1/8“
Order code: WF

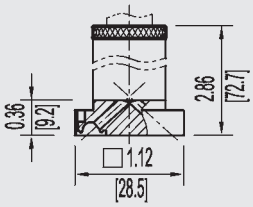

Dimensions and Wiring details NWU-1✳

Ingress Protection IP per IEC 60 529

	Dimensions in inch [mm]	2-wire
Circular connector M 12x1 4-pin, IP 65 (NEMA 4) *) Order code: M4	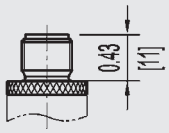	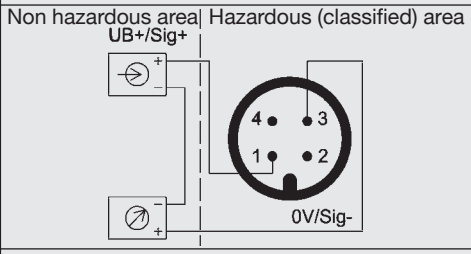
Flying leads IP 65 (NEMA 4) *) Order code: DI	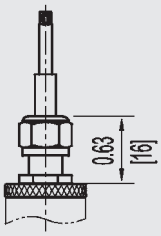	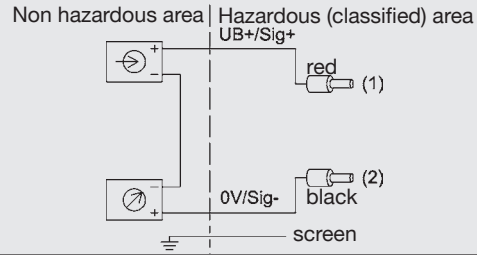
Bayonet connector 4-pin, IP 65 (NEMA 4) *) Order code: O4	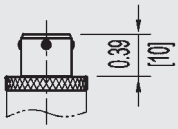	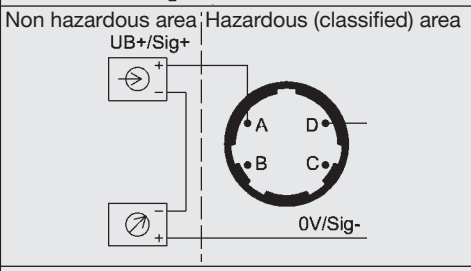
SUB-D connector 15-pin, IP 54 (NEMA 3S) Order code: TX	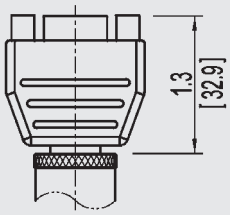	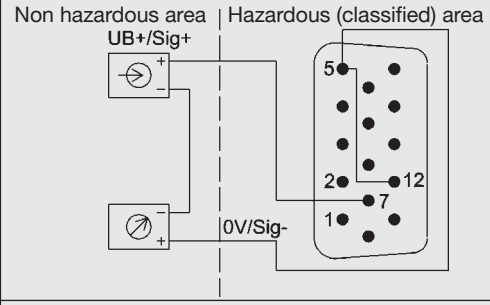
Circular Connector R03 6-pin, IP 54 (NEMA 3S) Order code: U6	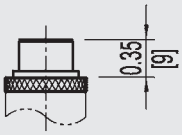	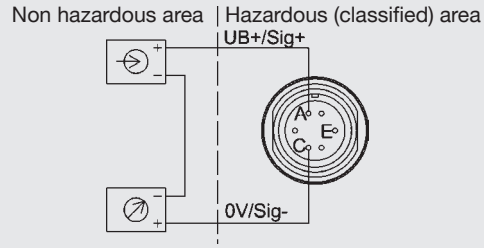

*) with side access IP 54 (NEMA 3S)

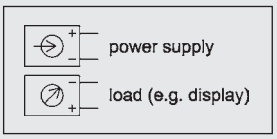

Specifications and dimensions given in this leaflet represent the state of engineering at the time of printing.
Modifications may take place and materials specified may be replaced by others without prior notice.

9077065 09/2007 GB

WIKA Alexander Wiegand GmbH & Co. KG
Alexander-Wiegand-Straße 30
63911 Klingenberg/Germany
Tel. (+49) 9372/132-0
Fax (+49) 9372/132-406
E-mail info@wika.de
www.wika.de