Precision test gauges with Bourdon tube according to EN 837-1

Nominal size ND 250 mm

Connection position bottom

Accuracy class 0.6

Description

Our precision test gauges are manufactured to highest standards and are used to test pressure in research and development, in laboratories and quality assurance.

The precision test gauges have a high-grade measuring element. The pressure proportional elastic deformation of this Bourdon tube is transmitted through al low friction movement to the knife edge pointer.

Test gauges are suitable for measuring of non-aggressive gaseous and liquid media, although this may not be to viscous or be susceptible to cristallization.

Accuracy can be prooved by means of calibration certificate acc. to DIN 55 350 Part 18 type M against surcharge.

Special features

o exact readings, small scale graduation

o accuracy class 0.6

o 1.3-fold overpressure capability

o window glass lens

Measuring ranges

0 ... 0.6 bar up to 0 ... 1600 bar

Applications

Precision monitoring in processing plants;
Control and adjustment of pressure gauges,
Test equipment

Model: P1883

Technical data

Model	P1883	Options
Nominal size	250	
Symbol		
Accuracy class	0.6 according EN 837-1	test certificate
Ranges	0 ... 0.6 bar up to 0 ... 1600 bar negative or positive / negative and positive gauge pressure	
Application	static pressure : up to full scale value dynamic pressure : up to 0.9 times full scale value 1.3 times max. rating shortly	
Case	steel, black finish	back flange
Bezel	steel, black finish	front flange
Window	glass lens	safety glass
Dial	aluminium white, scale markings black	
Pointer	knife edge pointer, aluminium, black	
Movement	brass	
Measuring element	copper alloy < 100 bar Bourdon tube, soft- soldered stainless steel 1.4571 ≥ 100 bar helical tube, hard- soldered NiFe -alloy ≥ 1000 bar helical tube, welded	
Connection - Location - Thread	< 1000 bar Brass; ≥ 1000 bar stainless steel 1. 4571 bottom G 1/2 B, SW 22	other threads on request
Temperatures - Media - Ambient	 Tmin. -20°C , Tmax. 60°C; soft-soldering Tmin. -20°C , Tmax. 100°C; hard-soldering/welding Tmin. -20°C , Tmax. 60°C	
Temperature drift	0.4 % / 10K if deviation from normal temperature 20°C	
Protection class	IP 54 according EN 60 529/IEC 529	
Calibration medium 1)	≤25 bar : gas , >25 bar : oil	≥ 4 bar : oil
Orifice		ø0.3 ; ø0.4 ; ø0.8
Weight approx.	3.0 kg	

1) Please state the used medium when ordering, because with the change of the pressure transmitting medium gas (G) or liquid (F), display changes can take place

Dimensions

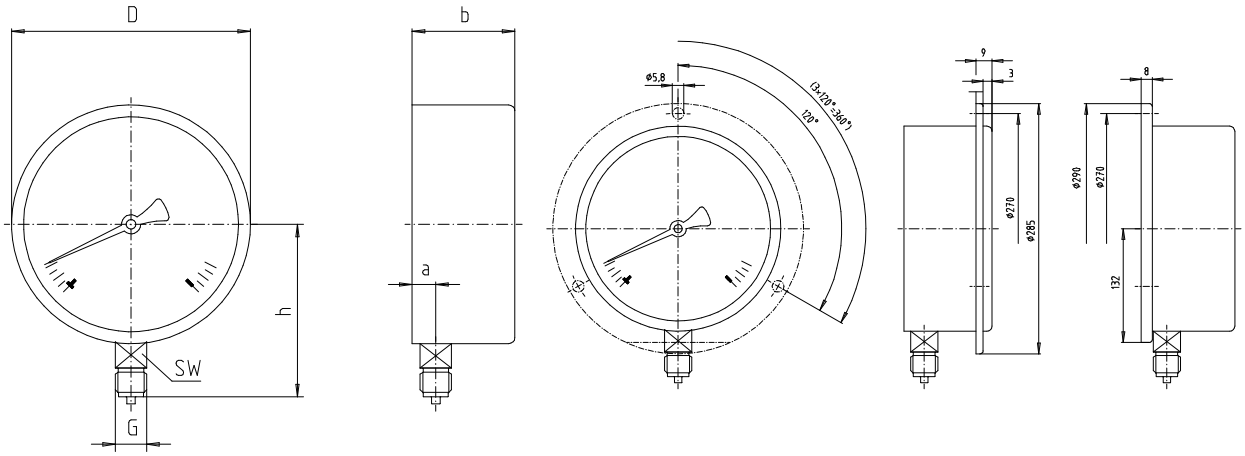

model P1883 version : front or back flange

Model	Dimensions (mm)								
	a	b ≤4 bar	6-60 bar	≥100 bar	D	f	h ±1	G	SW
P1883	17	64.5	51.5	64.5	250	50	165	G 1/2 B	22

Modifications reserved